RHYMEBUS

Solar Drive for Pump

RM6G1e Series 0.75kW-5.5kW

Green Tech
科技創未來・打造綠生活 Green Life

Powered by Solar Energy
Drive Your Green Future

RHYMEBUS 寧茂企業股份有限公司
40768台中市工業區33路17號 TEL+886-4-23595237 FAX+886-4-23595235
No. 17, 33rd Road, Taichung Industrial Park, Taichung, Taiwan 40768
Http://www.rhymebus.com.tw E-mail: inverter@mail.rhymebus.com.tw

XB200205 1805 Ver1 / 2009

Features of Solar Pump Inverter

- Built-in MPPT (Maximum Power Point Tracking), maximizes your power output.
- Supports dual power mode from 3Φ or 1Φ AC power or DC power of solar arrays.
- Built-in pump protection function in case of dry run, over pressure...etc.
- Automatic start and stop according to sunrise and sunset or sudden power cuts.
- Automatic start and stop function is compatible with level sensors, capable of controlling water level inside the overhead tank.

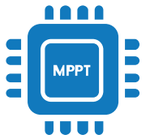

Built-in MPPT

Fault Protection

Dual power

Automatic Start/Stop

Solar Motor Inverter

System Structure

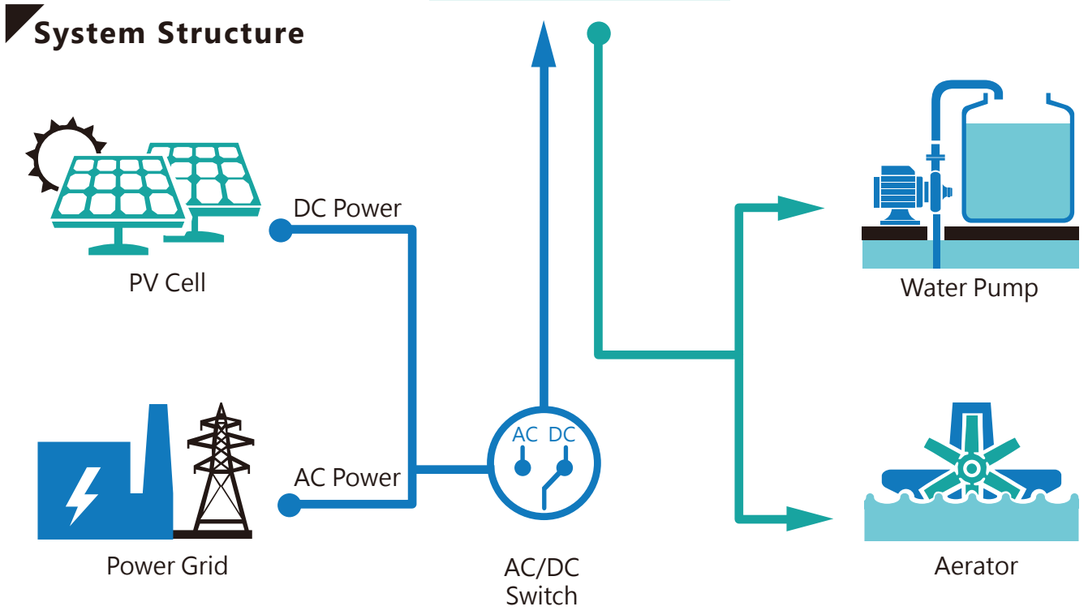

System Description

- High energy efficiency, reduces your carbon footprint.
- Fully automatic system, uses variable speed drives compatible with AC, 3-phase, submersible and surface mount pumps.
- As it is more efficient to store water than to store electricity, energy storing devices (eg. batteries) are excluded from the system.
- The system is prepared to be incorporated with an elevated water storage, e.g. a water tower or an uphill tank installation.

Application

Model Number Scheme

Standard Specifications

Model case (RM6G1e- □ A □□□□□)	2A005B1	2A007B1	2A010B1	2A005B3	2A007B3	2A010B3	2A016B3	2A022B3	4A003B3	4A004B3	4A005B3	4A009B3	4A011B3
Maximum applicable motor (HP/kW)	1 / 0.75	2 / 1.5	3 / 2.2	1 / 0.75	2 / 1.5	3 / 2.2	5 / 3.7	7.5 / 5.5	1 / 0.75	2 / 1.5	3 / 2.2	5 / 3.7	7.5 / 5.5
Rated output capacity (kVA)	1.6	2.6	3.8	1.6	2.6	3.8	5.8	8.0	1.8	2.7	3.7	6.9	8.4
Rated output current (A)	4.2	6.8	10	4.2	6.8	10	15.2	22	2.4	3.5	4.8	9	11
Maximum Output Voltage (V)	Three-phase 200~240V(Correspond to input voltage)								Three-phase 380~480V(Correspond to input voltage)				
Range of Output Frequency (Hz)	0.1~600.00Hz												
Power Source (ø, V, Hz)	Single-phas 200~240V 50/60Hz			Three-phase 200~240V 50/60Hz					Three-phase 380~480V 50/60Hz				
Input current (A)	9.8	18.3	23.8	5	8	12	18	25	2.8	4.2	5.8	12	13
Permissible AC power source fluctuation	170~264V 50/60Hz / ±5%								323~528V 50/60Hz / ±5%				
Overload Protection	120% of drive rated output current for 1 min												
Cooling type	Nature cooling		Fan cooling	Nature cooling		Fan cooling			Nature cooling		Fan cooling		
Product Compliance	UL508C, CSA C22.2 No.14-05, EN61800-3, EN61800-5-1												
Protective structure	IP20												
Weight (kg)	1.8	1.8	1.9	1.8	1.8	1.8	2.0	2.1	1.8	1.8	1.9	2.0	2.0
Case Code	Case1												